High-Frequency Off-Line Power Conversion Using Zero-Voltage-Switching Quasi-Resonant and Multiresonant Techniques

MILAN M. JOVANOVIĆ, SENIOR MEMBER, IEEE, WOJCIECH A. TABISZ, AND FRED C. Y. LEE, SENIOR MEMBER, IEEE

Abstract—**The characteristics and limitations of the half-bridge zero-voltage-switched (ZVS) quasi-resonant converters (QRC's) are described. A novel multiresonant switch concept is proposed for the half-bridge topology to improve the ZVS QRC's load range. Experimental results for 300-V 75-W zero-voltage-switched quasi-resonant and multiresonant converters operating in the frequency range of 2 MHz to 8 MHz are presented.**

I. Introduction

HIGH-FREQUENCY operation in off-line power conversion offers higher power density and faster transient response. To operate at a higher frequency, it is necessary to minimize switching losses. The zero-current-switching (ZCS) technique [1] has been demonstrated to achieve high-frequency high-efficiency operation for quasi-resonant off-line converters [2]–[4]. In the zero-current-switched quasi-resonant converters (ZCS QRC's), the current of the transistor is shaped by a resonant network, so that it is reduced to zero prior to turn-off to eliminate turn-off losses. Although ZCS QRC's can operate at relatively high frequencies, several limitations exist. The maximum switching frequency is limited to 1–2 MHz by the undesired capacitive turn-on loss. Here, the energy stored in the junction capacitance of the MOSFET is dissipated in the device during turn-on. Furthermore, the switching frequency for lighter loads is significantly reduced, resulting in lower crossover frequency and slower transient response. This is particularly true when the converter is operated in half-wave mode [1], [5]. The frequency range and transient response can be improved by operating a ZCS converter in full-wave mode [1], [5]. However, full-wave mode is difficult to implement at high frequencies due to the slow recovery of the MOSFET's body diode [5].

The zero-voltage-switching (ZVS) technique [6]–[8] was proposed to overcome the limitations of the ZCS technique. Switching turn-on losses of the power switches are eliminated by shaping the transistor's voltage waveform so that the voltage reduces to zero prior to turn-on. This enables the zero-voltage-switched quasi-resonant converters (ZVS QRC's) to operate at approximately 10 MHz [9]. Contrary to the ZCS QRC's, the switching frequency of ZVS QRC's is increased at light loads. Thus, it is possible to implement converters with high crossover frequencies and much improved dynamic responses. One common drawback of the ZVS technique when applied to single-ended converter topologies is the inherent high voltage stress across the switching transistor. Therefore, practical converter topologies for off-line applications are those that employ multiple switches, such as push-pull and bridge-type topologies, where the voltage across the off switch is automatically clamped by the conduction of its complementary switch [10], [11]. The half-bridge ZVS QRC topology has been chosen to demonstrate the feasibility of off-line high-frequency operation. The converter is operated in the half-wave mode. To maintain zero-voltage switching, the load range is rather limited.

In ZVS QRC's, the freewheeling diodes are operated under zero-current-switching conditions. Since the junction voltages are abruptly changed during switching, the junction capacitances tend to oscillate with the resonant inductance resulting in high-frequency ringing and power dissipation [16], [12].

The performances of ZVS QRC's can be drastically improved by the introduction of the multiresonant technique [12]. This technique enables both the active switches (power MOSFET's) and the passive switches (diodes) to operate with zero-voltage switching. In zero-voltage-switched multiresonant converters (ZVS MRC's), junction capacitances of all semiconductor devices are utilized to form a multiresonant network. This technique minimizes parasitic oscillations of all forms and is capable of achieving zero-voltage switching for a very wide load range.

This paper presents analysis, design, and experimental results of two half-bridge off-line converters implemented with both ZVS quasi-resonant and ZVS multiresonant techniques. The merits and limitations of these two techniques are discussed and the comparisons are made with

Manuscript received December 28, 1987; revised August 20, 1989. This work was supported in part by the Digital Equipment Corporation and in part by the Virginia Center for Innovative Technology. This paper was presented at the 1988 Applied Power Electronics Conference and Exposition, New Orleans, LA, February 1–5.

The authors are with the Virginia Power Electronics Center, Bradley Department of Electrical Engineering, Virginia Polytechnic Institute and State University, Blacksburg, VA 24061.

IEEE Log Number 8931452.

0885-8993/89/1000-0459$01.00 © 1989 IEEE

respect to efficiency, load range, and operating frequency range.

It should be noted that the zero-voltage-switching quasi-resonant and multiresonant techniques represent only two of the technologies with improved switching conditions which are suitable for high-frequency operation. Other zero-voltage-switching techniques used in off-line applications include class-E converters [13], resonant [14]–[16], and pseudo-resonant converters [17].

II. Half-Bridge Zero-Voltage-Switched Quasi-Resonant Converter

The circuit diagram of a half-bridge ZVS QRC is shown in Fig. 1. Resonant capacitors C_1 and C_2 represent the output capacitances of the MOSFET switches, whereas D_1 and D_2 represent the body diodes of the switches. L is the total resonant inductance. It consists of the transformer leakage inductance and external inductance which can be added to increase the total value of L.

To simplify the analysis the following points are assumed.

a) The output-filter inductance is sufficiently large to be approximated by a current source with a value equal to output current I_0.

b) The voltage drop across the conducting semiconductor devices is negligible.

c) The switching times of all semiconductor devices are zero.

d) Switches Q_1 and Q_2 are identical so that $C_1 = C_2 = C$, where C is the average capacitance of the switches, $C = C_{oss}^{av}$ [18].

A. Principle of Operation

Fig. 2 shows equivalent circuits of the HB ZVS QRC in the four topological stages. Circuit waveforms are shown in Fig. 3.

At the end of the conduction period of transistor Q_1, the voltage across C_1 is zero, whereas the voltage across C_2 is equal to supply voltage V_S. The output current I_0 flows through D_{R1} and the primary current is I_0/N, where N is the transformer's turns ratio.

1) Capacitor-charging stage [T_0, T_1], Fig. 2(a)

At $t = T_0$ (Fig. 3), transistor Q_1 is turned off and the circuit enters the capacitor-charging stage, shown in Fig. 2(a). After Q_1 is turned off, constant primary current I_0/N is diverted from Q_1 to C_1. As a result, voltage across C_1 increases linearly, whereas voltage across C_2 decreases at the same rate. The total load current still flows through D_{R1}. This stage terminates at $t = T_1$, when voltage v_{C2} decreases to $V_S/2$.

2) Resonant stage [T_1, T_2], Fig. 2(b)

At $t = T_1$, the transformer's primary winding voltage becomes negative and rectifier D_{R2} begins to conduct. Now, capacitors C_1 and C_2 and inductor L form a series-resonant circuit. The voltage v_{C2} continues to decrease below $V_S/2$ in a resonant manner. Since a negative voltage is applied across L, the primary current starts to decrease. To maintain constant output current I_0, both rectifiers D_{R1} and D_{R2} conduct simultaneously and the transformer secondary is shorted as shown in Fig. 2(b). Equations describing the switch voltages and primary current are

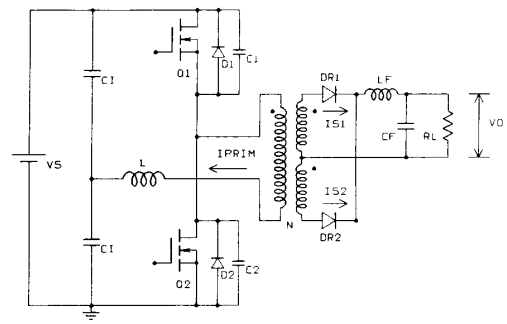

Fig. 1. Half-bridge zero-voltage-switched quasi-resonant converter (HB ZVS QRC).

$$v_{C1}(t) = \frac{V_S}{2} + \frac{I_0 Z_n}{N} \sin \omega_0 t, \tag{1a}$$

$$v_{C2}(t) = \frac{V_S}{2} - \frac{I_0 Z_n}{N} \sin \omega_0 t, \tag{1b}$$

$$I_{\text{prim}}(t) = \frac{I_0}{N} \cos \omega_0 t, \tag{1c}$$

where $\omega_0 = 1/\sqrt{2LC}$ is the resonant frequency and $Z_n = \sqrt{L/(2C)}$ is the characteristic impedance. This stage ends when voltage v_{C1} becomes V_S and voltage v_{C2} becomes zero. Subsequently, transistor Q_2 should be turned on to achieve a lossless turn-on. From 1(b) it follows that a zero-voltage-switching condition requires that

$$\frac{I_0}{N} Z_n \geq \frac{V_S}{2} \tag{2a}$$

or, in the normalized form

$$I_{0N} = \frac{2 I_0 Z_n}{N V_S} \geq 1 \tag{2b}$$

where I_{0N} is the normalized output current.

3) Inductor-discharging stage [T_2, T_3], Fig. 2(c)

When v_{C2} becomes zero at $t = T_2$ (Fig. 3), antiparallel diode D_2 starts conducting. A constant voltage $(-V_S/2)$ is applied across L and the primary current decreases linearly. Transistor Q_2 should be turned on before the primary current current begins to flow in the negative direction at $t = T_3'$. The stage terminates at $t = T_3$, when i_{prim} becomes $-I_0/N$.

4) Constant-current stage [T_3, T_4], Fig. 2(d)

At $t = T_3$, rectifier D_{R1} turns off and output current I_0 flows through D_{R2}. Therefore, the primary current of I_0/N flows through switch Q_2. Capacitor voltage v_{C2} is zero, while v_{C1} is equal to V_S. The stage ends when Q_2 is turned off by the gate-drive circuit, which initializes a new conversion cycle with the same sequence of operations.

The analytical expression for the dc voltage-conversion

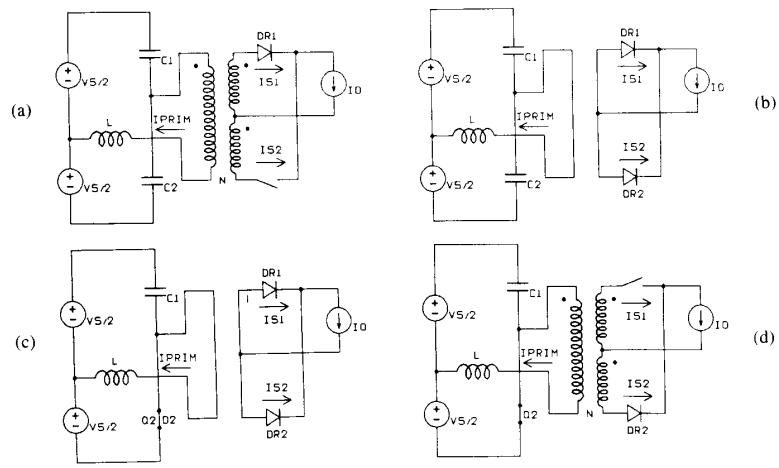

Fig. 2. Equivalent circuit of HB ZVS QRC in four topological stages. (a) Capacitor-charging stage $[T_0, T_1]$. (b) Resonant stage $[T_1, T_2]$. (c) Inductor-discharging stage $[T_2, T_3]$. (d) Constant-current stage $[T_3, T_4]$.

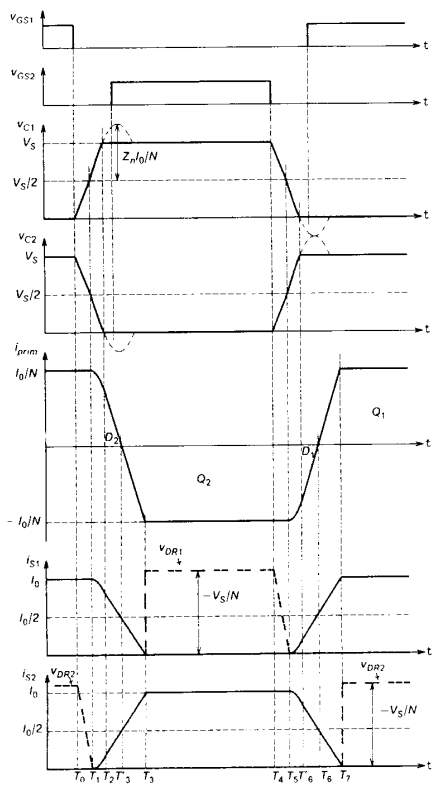

Fig. 3. Circuit waveforms of the HB ZVS QRC. Note that switch voltages (v_{C1}, v_{C2}) are clamped to V_S. Dashed portions of sinusoidal switch voltages indicate how voltages would look like if there were no clamping.

ratio is

$$M = 1 - \frac{f_{\text{con}}}{2\pi f_0}\left[\frac{r}{M} + \sin^{-1}\left(\frac{r}{M}\right) + \frac{M}{2r}\left[1 + \sqrt{1 - \left(\frac{r}{M}\right)^2}\right]^2\right] \tag{3}$$

where

$$M = \frac{V_0}{V_S/(2N)}, \tag{4}$$

$$r = \frac{N^2 R_L}{Z_n}, \tag{5}$$

and f_{con} is the conversion frequency, f_0 is the resonant frequency, V_0 is the output voltage, V_S is the supply voltage, Z_n is the characteristic impedance, R_L is the load resistance, and r is the normalized load resistance.

Fig. 4 shows the dc voltage-conversion ratio as a function of the normalized conversion frequency with the normalized load resistance as the running parameter.

B. Design Considerations

Since the HB ZVS QRC uses the junction capacitance of the MOSFET as the resonant component, the minimum value of the resonant capacitance (C) is limited by the availability of devices with the desired characteristics (C_{oss}). In fact, certain trade-offs have to be made regarding conversion frequency, load range, and efficiency.

The design of the resonant tank is based on the following equations:

$$I_{0N} = \frac{2 I_0 Z_n}{N V_S} = \frac{M}{r} \geq 1 \tag{6a}$$

$$Z_n = \sqrt{\frac{L}{2C}} \tag{6b}$$

$$f_0 = \frac{1}{2\pi\sqrt{2LC}}. \tag{6c}$$

Equation (6a) defines condition for zero-voltage switching, while (6b) and (6c) define the characteristic impedance and the resonant frequency, respectively.

Typically, the input data for the design of a converter

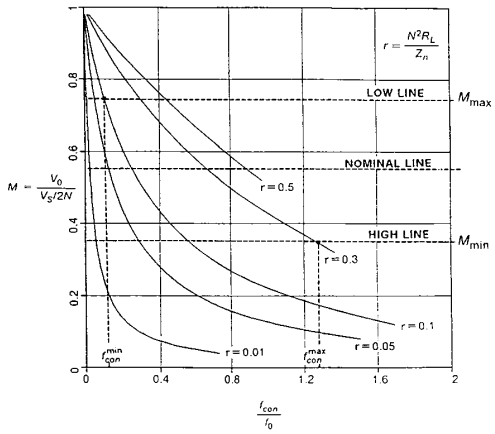

Fig. 4. DC voltage-conversion ratio of HB ZVS QRC as a function of normalized conversion frequency.

include equations:

input voltage range V_S^{min}, V_S^{max}
output voltage V_0
output current range I_0^{min}, I_0^{max}
minimum conversion frequency f_{con}^{min}.

Using (6a)–(6c) and the input data, it is possible to determine values for the resonant components ($C_1 = C_2 = C$, L). However, the value of the resonant capacitance C can not be smaller than the value of the output capacitance C_{oss}) of suitable MOSFET devices. For today's devices, C_{oss} is in the range of 35–500 pF (at $V_{ds} = 25$ V) with lower values corresponding to high-voltage devices (≥ 200 V) and, consequently, with a relatively high on-resistance [19].

Solving (6a)–(6c), the following conditions for resonant-tank components can be found:

$$C \leq \frac{1}{2\pi f_0} \frac{I_0^{min}}{N} \frac{1}{V_S} \tag{7a}$$

$$L \geq \frac{1}{2\pi f_0} \frac{N}{I_0^{min}} \frac{V_S}{2}. \tag{7b}$$

Equations (7a) and (7b) are represented graphically in Figs. 5 and 6, which show the maximum resonant capacitor C_{max} and minimum inductance L_{min}, respectively, as functions of the input voltage V_S, assuming a constant resonant frequency, $f_0 = 5$ MHz.

From Figs. 5 and 6, the following can be observed.

- For a given minimum primary current (I_0^{min}/N), C_{max} decreases as the input voltage increases.
- For a fixed input voltage, C_{max} decreases as the minimum primary current decreases.
- Relatively large resonant inductance is needed to accomplish zero-voltage switching with a lighter load.

From (7a), it can be observed that a higher resonant frequency requires a smaller resonant capacitance. Since the resonant capacitance is formed by the output capacitance of the MOSFET, the choices for the value of C are limited. Fig. 7 shows the dependence of the output capacitance on the drain-to-source voltage for typical MOSFET devices most likely to be used in off-line conversion. Fig. 8 shows superimposed plots of maximum resonant capacitance C_{max} (Fig. 5) and average output capacitance C_{oss}^{av} of the four MOSFET's. C_{oss}^{av} was calculated by averaging C_{oss} (Fig. 7) over the voltage range from 0 to V_S. If $C_{0.5V_S}$ is C_{oss} at $V_S/2$, then $C_{oss}^{av} = \sqrt{2}\, C_{0.5V_S}$ [18]. It can be observed that, for devices with relatively high output capacitance (such as IRF 620 and IRF 720), it is necessary to have a higher minimum primary current to accomplish zero-voltage-switching (approximately 0.65 A for IRF 720 and 1 A for IRF 620, at $V_S^{max} = 200$ V). For the

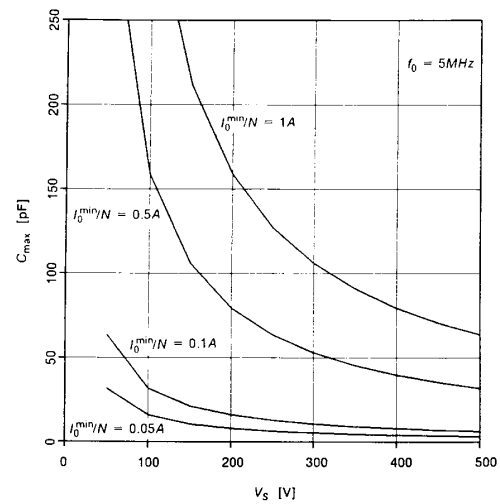

Fig. 5. Maximum resonant capacitance C_{max} for HB ZVS QRC as a function of input voltage V_S for four primary currents I_0/N and constant resonant frequency $f_0 = 5$ MHz.

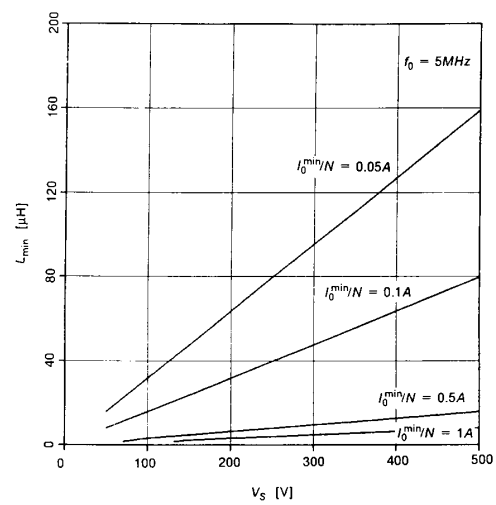

Fig. 6. Minimum resonant inductance L_{min} for HB ZVS QRC as function of input voltage V_S for four primary currents I_0/N and constant resonant frequency $f_0 = 5$ MHz.

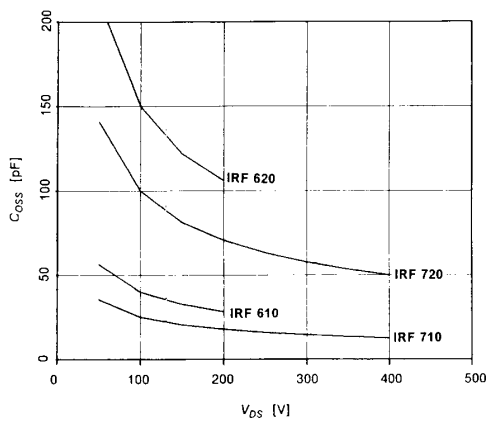

Fig. 7. Output capacitance C_{oss} of four high-voltage MOSFET devices as a function of drain-to-source voltage V_{DS}.

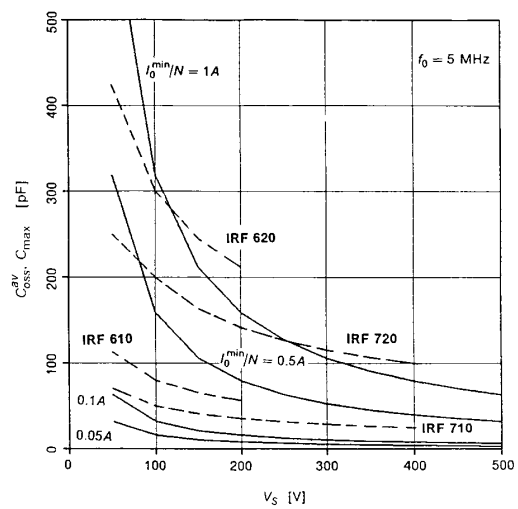

Fig. 8. Superimposed plots of average output capacitance C^{av}_{oss} (dash lines) and maximum resonant capacitance C_{max} (solid lines) for f_0 = 5 MHz (Fig. 5). C^{av}_{oss} was calculated by averaging C_{oss} over voltage range from 0 to V_S. If $C_{0.5V_S}$ is C_{oss} at $V_S/2$, then $C^{av}_{oss} = \sqrt{2}\, C_{0.5V_S}$.

low-capacitance devices, such as IRF 610 and IRF 710, a smaller minimum primary current is required (for example, approximately 0.25 A for IRF 710 at $V_S^{max} = 400$ V). If the resonant frequency is chosen at 2 MHz, the minimum primary current is 0.1 A for a 400-V operation using IRF 710. If the resonant frequency is chosen at 10 MHz, at least 0.5 A of the primary current is required for the same operating condition.

C. Design Procedure

Minimum primary current I_0^{min}/N can be kept at a desired level either by increasing I_0^{min} and/or by decreasing the turns ratio, N. However, increasing I_0^{min} results in a reduced load range, whereas reducing N increases the conduction loss of the primary side switches. Moreover, from the dc voltage-conversion characteristics of Fig. 4, a low turns ratio also decreases the load range. Therefore, it is recommended that the turns ratio of the transformer be maximized.

The maximum turns ratio of the transformer is determined by

$$N_{max} = M_{max} \frac{V_S^{min}}{2V_0}, \tag{8}$$

where M_{max} is typically selected between 0.7 and 0.9. Once the turns ratio N^* is chosen (* denotes a design value), the maximum primary current is

$$I_{prim}^{max} = \frac{I_0^{max}}{N^*}. \tag{9}$$

Since the voltage across the nonconducting MOSFET switch is clamped at the supply voltage, the maximum drain-to-source voltage is

$$V_{DS}^{max} = V_S^{max}. \tag{10}$$

To obtain the widest possible load range it is necessary to select MOSFET's with a current and voltage rating according to (9) and (10) and the smallest possible output capacitance, $C_{oss} = C^*$. Minimum conversion frequency f_{con}^{min} occurs at low line and full-load, i.e., for

$$M = M_{max} = 2N^* \frac{V_0}{V_S^{min}} \tag{11}$$

and

$$r = r_{min} = \frac{N^{*2} R_L^{min}}{Z_n} = \frac{N^{*2} V_0}{I_0^{max}} \sqrt{\frac{2C^*}{L^*}}. \tag{12}$$

Substituting (11) and (12) into (3) and solving the resulting transcendental equation, the value of resonant inductor L^* can be obtained.

The maximum value of the normalized load resistance at which zero-voltage switching is achieved is given by

$$r_{max} = \frac{N^{*2} R_L^{max}}{Z_n} = \frac{N^{*2} V_0}{I_0^{min} Z_n} = M_{min}. \tag{13}$$

Thus, the minimum regulated output current, determined by r_{max}, is

$$I_0^{min} = \frac{N^{*2} V_0}{M_{min} Z_n^*} = \frac{N^{*2} V_0}{M_{min} \sqrt{L^*/(2C^*)}} \tag{14}$$

and occurs at the maximum conversion frequency

$$f_{con}^{max} = 4\pi f_0 \frac{1 - M_{min}}{\pi + 3}. \tag{15}$$

For low output voltages, the above design equations should include the effect of the forward voltage drop of the rectifiers (V_{DR}) by replacing V_0 with $V_0' = V_0 + V_{DR}$.

D. Experimental Results

Following the design procedure outlined in the preceding section, a 75-W HB ZVS QRC operating with a 300 ± 50-V input, 5-V output, and minimum conversion fre-

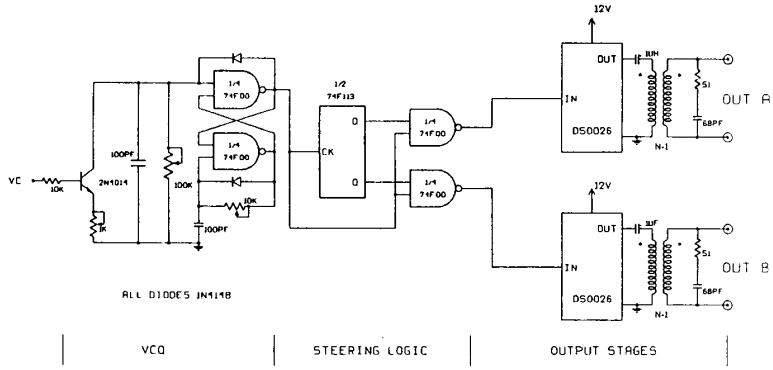

Fig. 9. Circuit diagram of two-channel, isolated gate drive.

quency of 1 MHz was implemented. The power stage, shown in Fig. 1, consists of the following components:

Q_1, Q_2	IRF 710 (International Rectifier).
D_1, D_2	Internal body diode of IRF 710.
C_1, C_2	Junction capacitance of IRF 710, $C_{oss}^{max} = 50$ pF @ 25 V.
C_1	0.1 μF/400 V metalized polyester.
TR	Core: TDK LP 32/13 (material H_{7C4}); primary: 16 turns of 60/40 Litz wire (equiv. AWG #22); secondary: 1 turn 135/35 Litz wire (equiv. AWG #15), center-tapped.
L	Leakage inductance of the transformer $\simeq 16$ μH.
D_{R1}, D_{R2}	60CNQ045 (International Rectifier).
L_F	1 μH @ 15 A, Magnetics MPP core 55125 with 6 turns of magnet wire AWG #18.
C_F	3.3 μF $\times$ 3, Z5U multilayer chip capacitors.

Also, to reduce ringings across the rectifiers at turn-off, an R-C snubber is used ($R_s = 10\ \Omega$, $C_s = 1.5$ nF). For IRF 710, the calculated average C_{oss} is approximately 20 pF [18], [19]. However, to account for stray capacitance between the drain of the lower switch and ground, it is assumed that the design value is $C^* = 30$ pF. The estimated resonant frequency is $f_0 = 5.3$ MHz.

The power stage was driven using a two-channel isolated gate drive, shown in Fig. 9. The drive consists of the voltage-controlled oscillator (VCO), steering logic, and DS0026 output stages. Control voltage V_C sets the frequency of the VCO, which generates constant off-time pulses distributed to the two output stages by the steering logic. The isolation transformers are wound bifilarly to minimize the leakage inductance and their outputs are directly soldered to the gate and source terminals of the MOSFET's with minimum lead length. When driving IRF 710, the drive can operate up to 10 MHz, with 2-W power dissipation and voltage rise and fall slopes of approximately 1 V/ns.

Figs. 10 and 11 show the measured efficiency and conversion frequency of the breadboarded converter as functions of the output power. It can be seen that an efficiency greater than 80 percent was achieved at low line. At high line, the efficiency drops slightly below 80 percent due to an increased core loss of the transformer and turn-off losses in the rectifiers and power switches. From Fig. 10 it can be also seen that the load range is rather limited. At

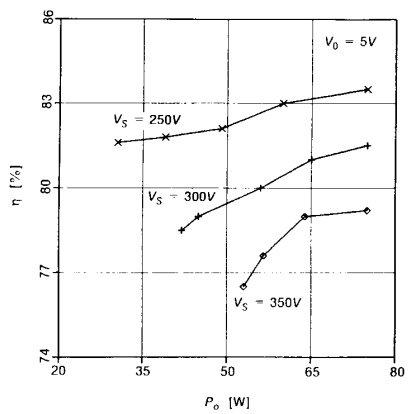

Fig. 10. Measured efficiency of HB ZVS QRC power stage as a function of output power.

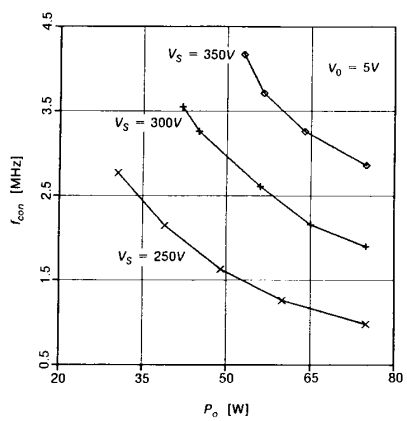

Fig. 11. Measured conversion frequency of HB ZVS QRC power stage as function of output power.

high line, the converter operates with zero-voltage-switching from full load down to 70 percent of full load (10.5 A), whereas at low line the load range extends to 40 percent (6 A). It is possible to operate the converter at lighter loads. However, the converter will operate without zero-voltage-switching and, consequently, with lower efficiency.

According to (14), the predicted minimum load current of the converter is approximately 6 A (40 percent of full load), while in the experimental converter it was 10.5 A (70 percent of full load). The discrepancy is primarily due to the parasitic oscillation between the junction capacitance of the rectifiers and the resonant inductor. As shown in Fig. 12, when the primary switches conduct, the primary current (I_{prim}) is oscillatory instead of being constant (I_0/N). As a result, at higher frequencies (above approximately 4 MHz) the primary switches can be turned off at an instantaneous current below the average value of I_0/N. This accounts for a loss of zero-voltage-switching at output currents higher than those predicted theoretically.

Finally, it should be pointed out that the transformer's size is larger than necessary. The main reason for selecting a relatively large core is a significant separation between the primary and secondary windings, necessary for obtaining a large leakage inductance required for zero-voltage-switching. At heavy loads the major portion of the transformer loss occurs in the secondary windings, whereas the core loss is dominant at light loads (higher frequencies).

III. Half-Bridge Zero-Voltage-Switched Multiresonant Converter

All practical ZVS QRC's suffer from the undesired parasitic oscillations between the resonant inductor and junction capacitance of the rectifier [16], [12]. These oscillators not only limit the converter's load range but also adversely affect the dc voltage-conversion-ratio characteristics in such a way that the conversion ratio exhibits positive slopes in certain regions (only negative slopes are desirable). These positive-slope characteristics can result in loop instability. To assure stable operation, it is necessary to suppress the parasitic oscillations. This is often achieved by using dissipative snubbers across the rectifiers. This solution can result in a significant reduction of efficiency, especially at high-frequency operation.

A novel multiresonant-switch concept [12] was proposed recently to alleviate the aforementioned difficulties. The proposed technique allows the rectifier's junction capacitance to resonate in a controlled fashion with the resonant inductor. To obtain desired resonant frequency, an external capacitance can be added in parallel with the rectifier if the diode junction capacitance is not sufficiently large.

The circuit diagram of a half-bridge zero-voltage-switched multiresonant converter (HB ZVS MRC) is shown in Fig. 13. It differs from the diagram of the HB ZVS QRC only by showing the capacitors across the rectifiers. These capacitors represent the junction capacitance of the rectifiers and any externally added capacitance.

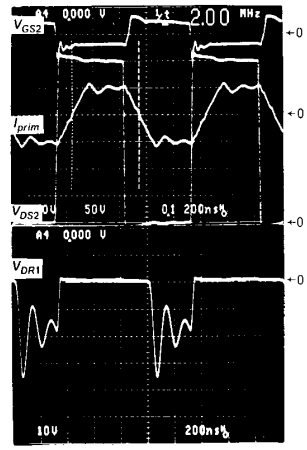

Fig. 12. Gate drive voltage V_{GS2}, primary current I_{prim}, switch voltage V_{DS2}, and rectifier voltage V_{DR1} waveforms of the HB ZVS QRC at full power (5 V/15 A). Input voltage V_S = 300 V, conversion frequency f_{con} = 2 MHz, scale: V_{GS} – 20 V/div; V_{DS} – 50 V/div; I_{prim} = 1 A/div; V_{DR1} – 10 V/div.

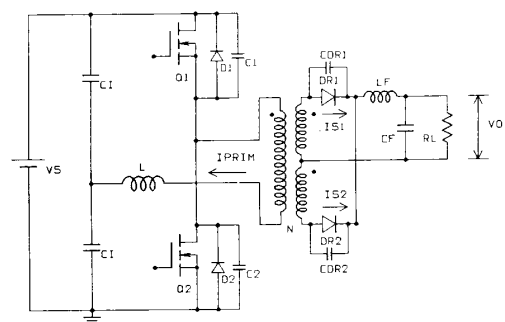

Fig. 13. Half-bridge zero-voltage-switched multiresonant converter (HB ZVS MRC).

A. Principle of Operation

There are several possible modes of operation of the HB ZVS-MRC [18]. The mode of operation which occurs at heavier loads is described below. For ease of explanation, the assumptions made in Section II are employed. Fig. 14 shows the equivalent circuit of the HB ZVS MRC in the four topological stages, whereas Fig. 15, shows typical waveforms.

Switch-resonant stage [T_0, T_1], Fig. 14(a)

When transistor Q_1 is on, capacitance C_{DR2} and inductance L resonate. At $t = T_0$, transistor Q_1 is turned off. Since rectifier D_{R2} is still reverse biased, the equivalent circuit of the converter is as shown in Fig. 14(a). During this stage, capacitance C_1 is being charged in a resonant manner toward the supply voltage, whereas C_2 is being discharged. The stage terminates at $t = T_1$ when voltage v_{C2} becomes zero. Subsequently, transistor Q_2 should be switched on to achieve a lossless turn-on.

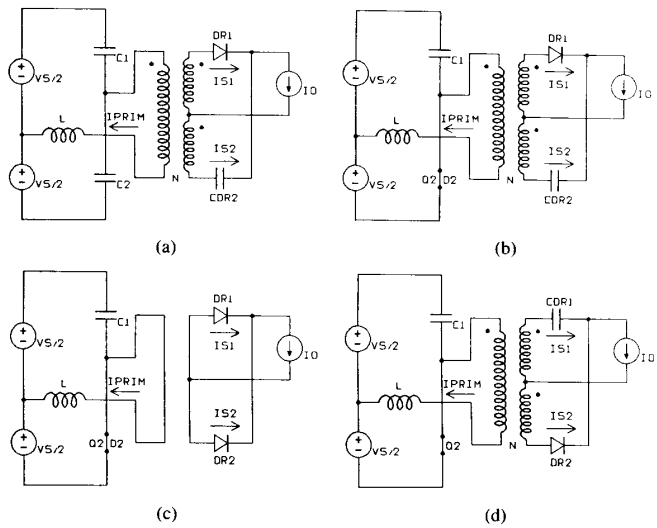

Fig. 14. Equivalent circuit of HB ZVS MRC in four topological stages. (a) Switch-resonant stage $[T_0, T_1]$. (b) Rectifier-capacitor-discharging stage $[T_1, T_2]$. (c) Inductor-discharging stage $[T_2, T_3]$. (d) Rectifier-Resonant stage $[T_3, T_4]$.

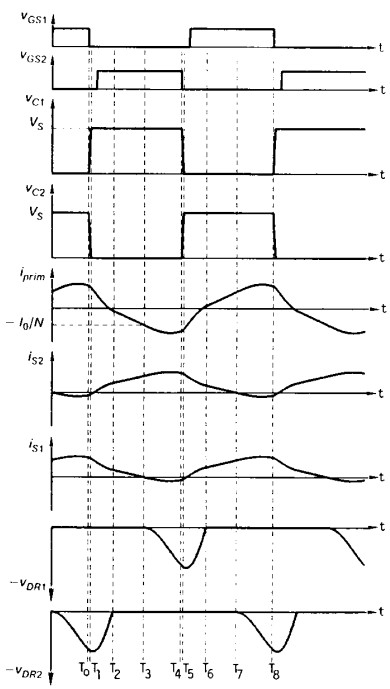

Fig. 15. Circuit waveforms of the HB ZVS MRC.

Rectifier-capacitor discharging stage $[T_1, T_2]$, Fig. 14(b)

In this stage, C_{DR2} continues to resonate with L. Due to a negative voltage across L, the primary current decreases and C_{DR2} continues to discharge. The stage terminates at $t = T_2$ when the capacitor voltage across C_{DR2} becomes zero and diode D_{R2} becomes forward biased.

Inductor-discharging stage $[T_2, T_3]$, Fig. 14(c)

During this stage, both rectifiers conduct so that the primary voltage is zero and a negative voltage is applied to L. As a result, the primary current decreases with a constant rate. The stage terminates at $t = T_3$ when the primary current becomes $-I_0/N$ and rectifier D_{R1} ceases to conduct.

Rectifier-resonant stage $[T_3, T_4]$, Fig. 14(d)

At $t = T_3$, C_{DR1} starts resonating with inductance L. This stage ends when switch Q_2 is turned off and a new conversion cycle is initiated. If switch Q_2 stays on for a longer time, the rectifier voltage may oscillate for several cycles. In this particular mode of operation, the dc voltage-conversion ratio shows undesired positive-slope characteristics. To avoid this mode of operation it is necessary to limit the on-time to approximately one half of the resonant period of the rectifier voltage. As a result, the ZVS MRC's operate typically with limited minimum switching frequency.

Fig. 16 shows the dc voltage-conversion ratio as a function of the conversion frequency. These characteristics are plotted with two parameters specified: $I_{0N} = 2Z_n I_0/(NV_S)$, the normalized output current, and $X_C = 2C_{DR}/(N^2C)$, the ratio of the capacitance across the rectifiers reflected into the primary $(C_{DR}/(N/2)^2)$ and the resonant capacitance of the primary $(2C)$.

As already mentioned, the minimum conversion frequency must be limited to ensure that the operating point of the converter does not go into the positive-slope region. This limits the allowed operating regions to the right of the dashed lines in Fig. 16.

B. Design Guidelines

The design of the HB ZVS MRC is based on the numerically-calculated dc voltage-conversion-ratio characteristics [18] shown in Fig. 16. The design guidelines generally follow those of the HB ZVS QRC. In fact, the guidelines for selecting the transformer turns ratio and the

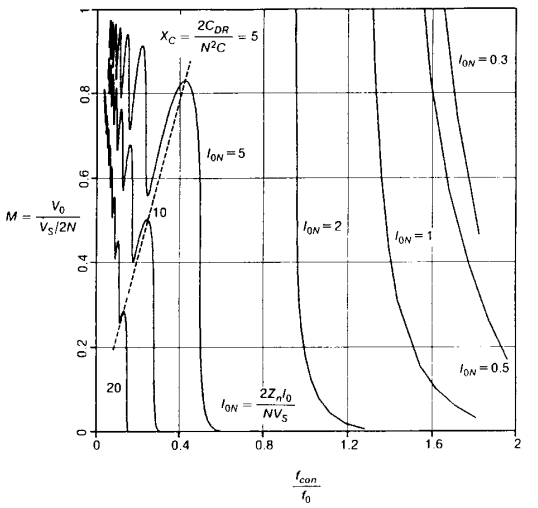

(a)

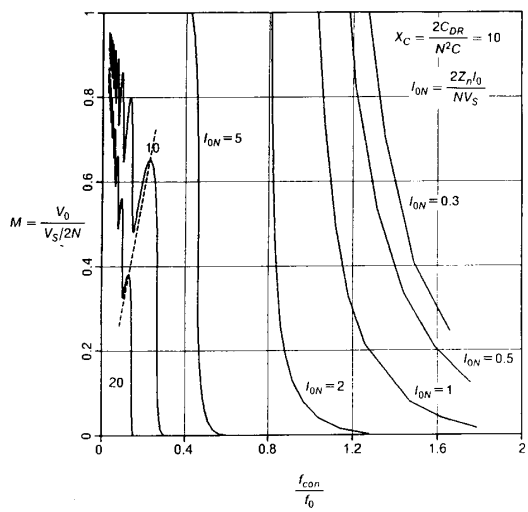

(b)

Fig. 16. DC voltage-conversion ratio of HB ZVS MRC as function of normalized conversion frequency. (a) $X_C = 5$. (b) $X_C = 10$. Normalized output current $I_{0N} = 2Z_n I_0/(NV_S)$ and $X_C = 2C_{DR}/(N^2C)$ are parameters. Note that X_C represents the ratio of the capacitance across the rectifiers reflected into the primary ($C_{DR}/(N/2)^2$ and the resonant capacitance of the primary ($2C$)).

resonant capacitance are identical. To determine the values of resonant inductor L and capacitance C_{DR}, it is necessary to use the dc voltage-conversion ratio characteristics plotted for various X_C. Capacitance C_{DR}^* is determined by selecting X_C, whereas inductance L^* is determined by selecting I_{0N} at low line and full load, i.e., $I_{0N}^{\max} = 2Z_n I_0^{\max}/(N^* V_S^{\min})$. Finally, the primary switches are selected according to the voltage and current ratings, on-resistance, and the output capacitance. It should be noted that unlike the HB ZVS QRC, the HB ZVS MRC can achieve a specified load range regardless of the value of the capacitance of the primary switches (C_{oss}) by properly selecting the capacitance across the rectifiers (C_{DR}). However, devices with larger C_{oss} (smaller on-resistance $R_{DS(on)}$) require larger C_{DR}. As a result, for lower on-resistance devices (higher C_{oss}), the rms currents in the converter increase causing a higher power dissipation in the primary and secondary windings of the transformer and in the rectifiers. The conduction loss in the primary switches usually decreases (due to a lower on-resistance of the switches) but in most cases not enough to improve the overall efficiency. Usually, selection of devices with relatively high on-resistances and low output capacitances results in better performance. The voltage across the nonconducting switch in the HB ZVS MRC is the same as in the HB ZVS QRC. However, the peak current in the HB ZVS MRC is higher than that in the HB ZVS QRC. Fig. 17 shows the normalized peak primary current in a HB ZVS MRC as a function of X_C. The maximum peak current occurs at $I_{0N} = I_{0N}^{\max} = 2Z_n I_{0N}^{\max}/(N^* V_S^{\min})$.

A HB ZVS MRC was designed with the same specifications as the HB ZVS QRC ($P_0 = 75$ W, $V_0 = 5$ V, $V_S = 300$ V $\pm$ 50 V, $f_{con} > 1$ MHz). Therefore, the turns ratio of the transformer and the resonant capacitance for the HB ZVS MRC are assumed the same as for the HB ZVS QRC ($N^* = 16$, $C^* = 30$ pF). Selecting $X_C = 5$, it follows that $C_{DR} = X_C N^2 C/2 \simeq 20$ nF. Also, selecting $I_{0N}^{\max} = 5$, the resonant inductor value is $C(NI_{0N}^{\max} V_S^{\min}/I_0^{\max})^2/2 \simeq 25$ μH. From Fig. 17, for $X_C = 5$ and $I_{0N} = I_{0N}^{\max} = 5$, $I_{\text{prim}}^{\max}/(I_0^{\max}/N^*) \simeq 1.44$. Since $I_{\text{prim}}^{\max} = 1.44 \times (15\text{ A})/16 = 1.35$ A, the IRF 710 transistors are selected for the primary switches. Estimated resonant frequency of the converter is $f_0 \simeq 4$ MHz. From Fig. 16(a), the minimum conversion frequency (which occurs for $I_{0N}^{\max} = 5$) is approximately 2 MHz.

C. Experimental Results

The power stage of the HB ZVS MRC, Fig. 13, has the same components as that of the experimental HB ZVS QRC, except that a capacitance of approximately 20 nF (3×6.8 nF, NPO ceramic chip capacitors) is added in parallel to each rectifier and the transformer leakage inductance is increased to $\simeq 25$ μH.

The measured efficiency and conversion frequency are shown in Figs. 18 and 19. Compared to the HB ZVS QRC, the efficiency of the HB ZVS MRC is slightly lower. This can be attributed to a higher rms value of the primary and secondary currents, loss in the capacitors across the rectifiers, and loss due to an increased transformer leakage. As can be seen, the converter operates with zero-voltage switching in the load range from 10 to 100 percent. The conversion frequency varies from 1.5 MHz to slightly above 8 MHz. Fig. 20 shows typical oscillograms of the converter at full load. It is also possible to operate the converter with no load, as shown in Fig. 21. Even though zero-voltage-switching is lost, the switches are turned on with a relatively low voltage.

IV. Conclusion

The zero-voltage-switching technique is implemented using the half-bridge topology for high-frequency off-line

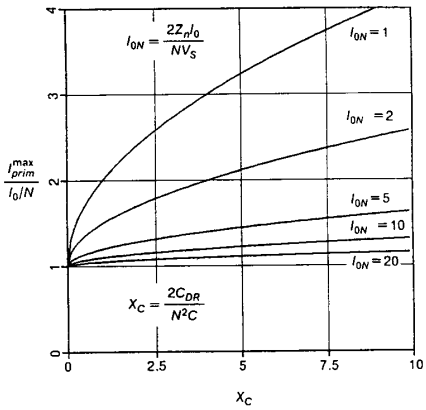

Fig. 17. Normalized primary peak current of HB ZVS MRC as function of X_C.

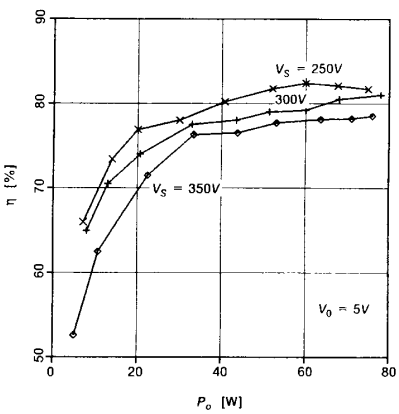

Fig. 18. Measured efficiency of HB ZVS MRC power stage as function of output power.

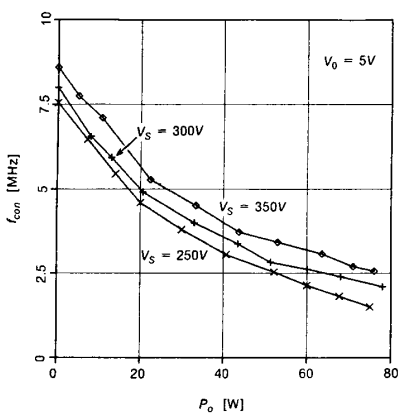

Fig. 19. Measured conversion frequency of HB ZVS MRC power stage as function of output power.

applications. Two zero-voltage-switching techniques are discussed in this paper: one employs the quasi-resonant technique, the other employs a novel multiresonant technique. In ZVS QRC's, the power switches are operated

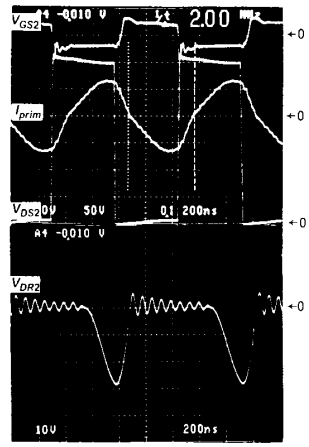

Fig. 20. Gate drive voltage V_{GS2}, primary current I_{prim}, switch voltage V_{DS2}, and rectifier voltage V_{DR2}. Waveforms of HB ZVS MRC at full power (5 V/15 A). Input voltage V_S = 300 V, conversion frequency f_{con} = 2 MHz. Scale: V_{GS} – 20 V/div; V_{DS} – 50 V/div; I_{prim} – 1 A/div; V_{DR1} – 10 V/div.

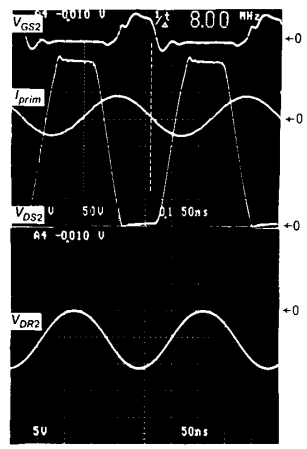

Fig. 21. Gate drive voltage V_{GS2}, primary current I_{prim}, switch voltage V_{DS2}, and rectifier voltage V_{DR2} waveforms of HB ZVS MRC at no load (5 V/0 A). Input voltage V_S = 300 V, conversion frequency f_{con} = 8 MHz. Scale: V_{GS} – 20 V/div; V_{DS} – 50 V/div; I_{prim} – 0.5 A/div; V_{DR1} – 5 V/div.

with zero-voltage switching. Nonetheless, the rectifier diodes are switched with an abrupt change in voltage, which induces high-frequency ringings and power dissipation. The ZVS QRC's also exhibit limited load range. The dc characteristics of a half-bridge ZVS QRC and a ZVS MRC are analyzed, the performances of the two converters are compared, and design procedures are outlined.

A breadboarded HB ZVS QRC is presented, which operates from a 300 ± 50-V input with maximum output power of 75 W (5 V/15 A) and a full-load efficiency of 83.5 percent at low line and 79.2 percent at high line. The converter operates with zero-voltage switching only in a relatively limited load range, from full load to about 55 percent of full load at nominal line voltage. To regulate the output voltage for the above input voltage and load

range, the conversion frequency varies from 1 MHz to 4.2 MHz.

In ZVS MRC's, all semiconductor devices are operated with no abrupt changes of the voltage across the device. This technique permits utilization of junction capacitances of all semiconductor devices and the transformer leakage inductance in a multiple-element resonant network. Consequently, ZVS MRC's operate with a high conversion frequency, wide load range, and zero-voltage switching of all semiconductor devices.

Employing this technique, a HB ZVS MRC was breadboarded with the same specifications as the HB ZVS QRC. The full-load efficiency of the HB ZVS MRC is slightly lower than that of the HB ZVS QRC, 81.7 percent at low line and 78.5 percent at high line. However, the converter can be operated from full load down to 10 percent of full load with a conversion frequency from 1.5 MHz to 8 MHz.

The HB ZVS MRC has a potential to operate at yet higher frequencies (over 10 MHz). Practically, the main obstacle in achieving this is the relatively high output capacitance of today's available MOSFET devices and a lack of adequate core materials for very high-frequency power transformers.

References

[1] K. Liu, R. Oruganti, and F. C. Lee, "Quasi-Resonant Converters—Topologies and Characteristics," *IEEE Trans. Power Electron.*, vol. PE-2, no. 1, pp. 62–74, Jan. 1987.

[2] P. Vinciarelli, "Forward Converter Switching at Zero Current," U.S. Pat. 4 415 959, 1983.

[3] A. Heyman, "Low-profile high-frequency off-line quasi-resonant converter," in *Proc. IEEE Applied Power Electronics Conf.*, 1987, pp. 157–165.

[4] D. C. Hopkins, M. M. Jovanović, F. C. Lee, F. W. Stephenson, "Hybridized off-line 2-MHz zero-current-switched quasi-resonant converter," *IEEE Trans. Power Electron.*, vol. 4, no. 1, pp. 147–154, Jan. 1989.

[5] M. M. Jovanović, D. C. Hopkins, and F. C. Lee, "Evaluation and design of megahertz-frequency off-line zero-current-switched quasi-resonant converters," *IEEE Trans. Power Electron.*, vol. 4, no. 1, pp. 136–146, Jan. 1989.

[6] P. C. Todd and R. W. Lutz, "Practical resonant power converters—theory and application: part II—the resonant switch concept," *Powertechnics Magazine*, May 1986.

[7] K. H. Liu, F. C. Lee, "Zero-voltage switching technique in dc/dc converters," in *IEEE Power Electronics Specialists Conf. Rec.*, 1986, pp. 58–70.

[8] M. K. Kazimierczuk and J. Jóźwik, "New topologies of high-efficiency high-frequency zero-voltage-switching resonant dc/dc converters," *29th Midwest Symp. Circuits and Systems Proc.*, 1986, pp. 474–477.

[9] W. A. Tabisz, P. Gradzki and F. C. Lee, "Zero-voltage-switched quasi-resonant buck and flyback converters—experimental results at 10 MHz," *IEEE Trans. Power Electron.*, vol. 4, no. 2, pp. 194–204, Apr. 1989.

[10] K. H. Liu, "High-frequency quasi-resonant converter techniques," Ph.D. Dissertation, Virginia Polytechnic Institute and State University, Blacksburg, VA, Oct. 17, 1986.

[11] B. Carsten, "A hybrid series-parallel resonant converter for high-frequency and power levels," in *Proc. High Frequency Power Conversion Conf.*, pp. 41–47, 1987.

[12] W. A. Tabisz and F. C. Lee, "Zero-Voltage Switching Multiresonant Technique—a novel approach to improve performance of high-frequency quasi-resonant converters," *IEEE Trans. Power Electron.*, vol. 4, no. 4, pp. 450, Oct. 1989.

[13] F. M. Magalhaes, F. T. Dickens, G. R. Westerman, and N. G. Ziesse, "Zero-voltage-switch resonant half-bridge high-voltage dc-dc converter," in *Proc. High Frequency Power Conversion Conf.*, pp. 332–343, 1988.

[14] R. L. Steigerwald, "A comparison of half-bridge resonant converter topologies," *IEEE Trans. Power Electron.*, vol. 3, no. 2, pp. 174–182, Apr. 1988.

[15] J. A. Sabaté and F. C. Lee, "Off-line application of the fixed frequency clamped mode series-resonant converter," in *Proc. IEEE Applied Power Electronics Conf.*, 1989, pp. 213–220.

[16] L. Casey and M. Schlecht, "A high frequency, low volume, point-of-load power supply for distributed power systems," *IEEE Trans. Power Electron.*, vol. 3, no. 1, pp. 72–82, Jan. 1988.

[17] O. D. Patterson and D. M. Divan, "Pseudo-resonant full-bridge dc/dc converter," *IEEE Power Electronics Specialists Conf. Rec.*, pp. 91–100, 1987.

[18] M. M. Jovanović and F. C. Lee, "Mode analysis of half-bridge zero-voltage-switched multi-resonant converter," *IEEE Power Electronics Specialists' Conf. Rec.*, pp. 252–261, 1989.

[19] International Rectifier, Hexfet Designer's Manual, HDB-4, 1987.

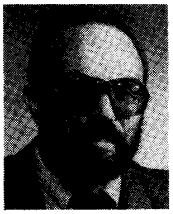

Milan M. Jovanović (S'86–M'89–SM'89) received his B.S. degree from the University of Belgrade, Belgrade, Yugoslavia, the M.S. degree from the University of Novi Sad, Yugoslavia, and the Ph.D. degree from Virginia Polytechnic Institute and State University, Blacksburg, VA, in 1976, 1981, and 1988, respectively, all in electrical engineering.

He was on the faculty at the Institute for Power and Electronics at the University of Novi Sad from 1976 to 1988. Currently, he is with the Virginia Power Electronics Center at Virginia Polytechnic Institute and State University. His research interests include modeling, testing, evaluation, and application of high power semiconductor devices, and analysis and design of high frequency power processors.

Dr. Jovanović is a member of Sigma Xi, Phi Kappa Phi, and Eta Kappa Nu.

Wojciech A. Tabisz, for a photograph and biography please see page 458 of this issue.

Fred C. Y. Lee (S'72–M'74–M'77–SM'87), for a photograph and biography please see page 390 of this issue.